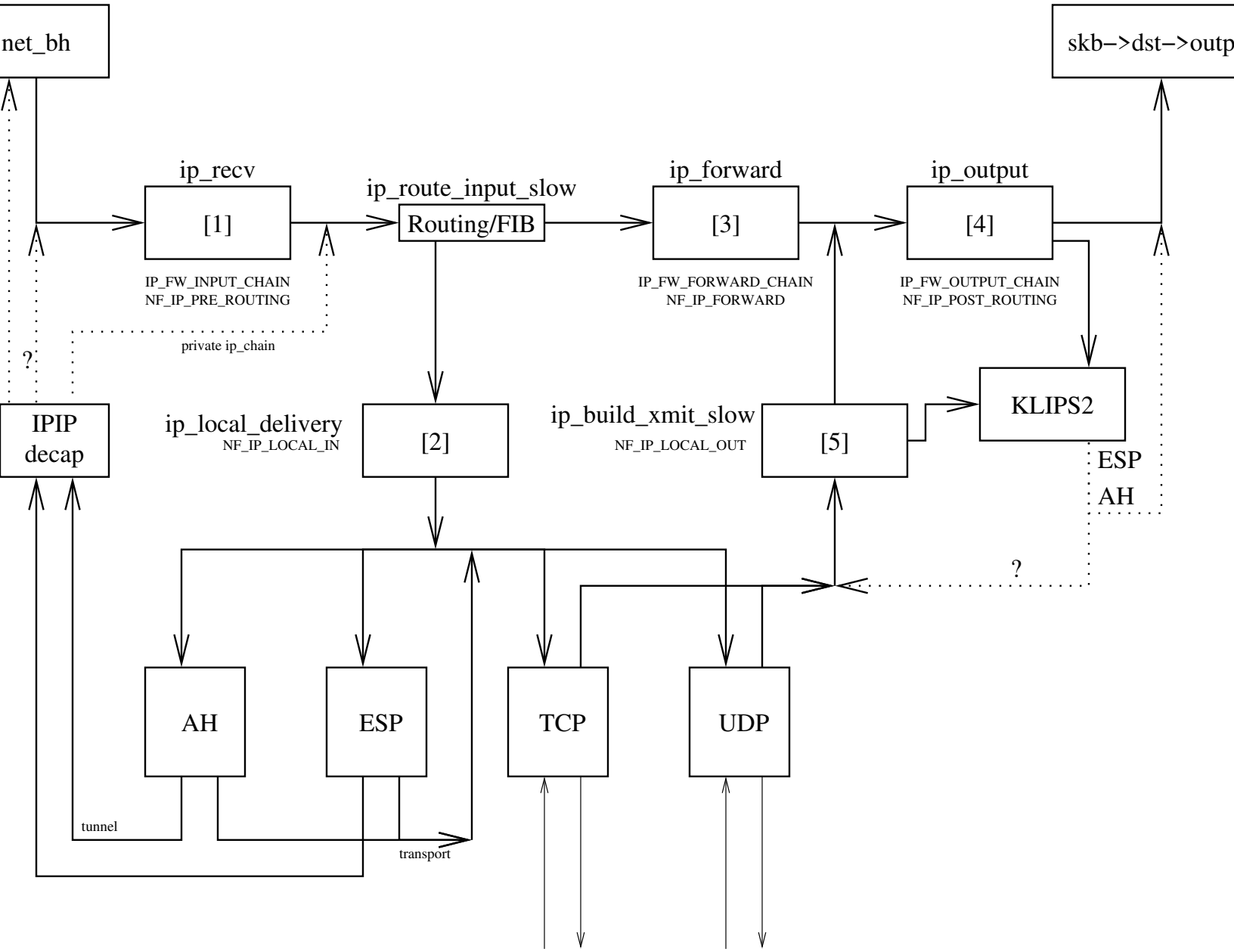
net_bh
skb->dst->outp
ip_recv
[1]
IP_FW_INPUT_CHAIN
NF_IP_PRE_ROUTING
ip_route_input_slow
Routing/FIB
ip_forward
[3]
IP_FW_FORWARD_CHAIN
NF_IP_FORWARD
ip_output
[4]
IP_FW_OUTPUT_CHAIN
NF_IP_POST_ROUTING
private ip_chain
?
IPIP
decap
ip_local_delivery
NF_IP_LOCAL_IN
[2]
ip_build_xmit_slow
NF_IP_LOCAL_OUT
[5]
KLIPS2
ESP
AH
?
AH
ESP
TCP
UDP
tunnel
transport