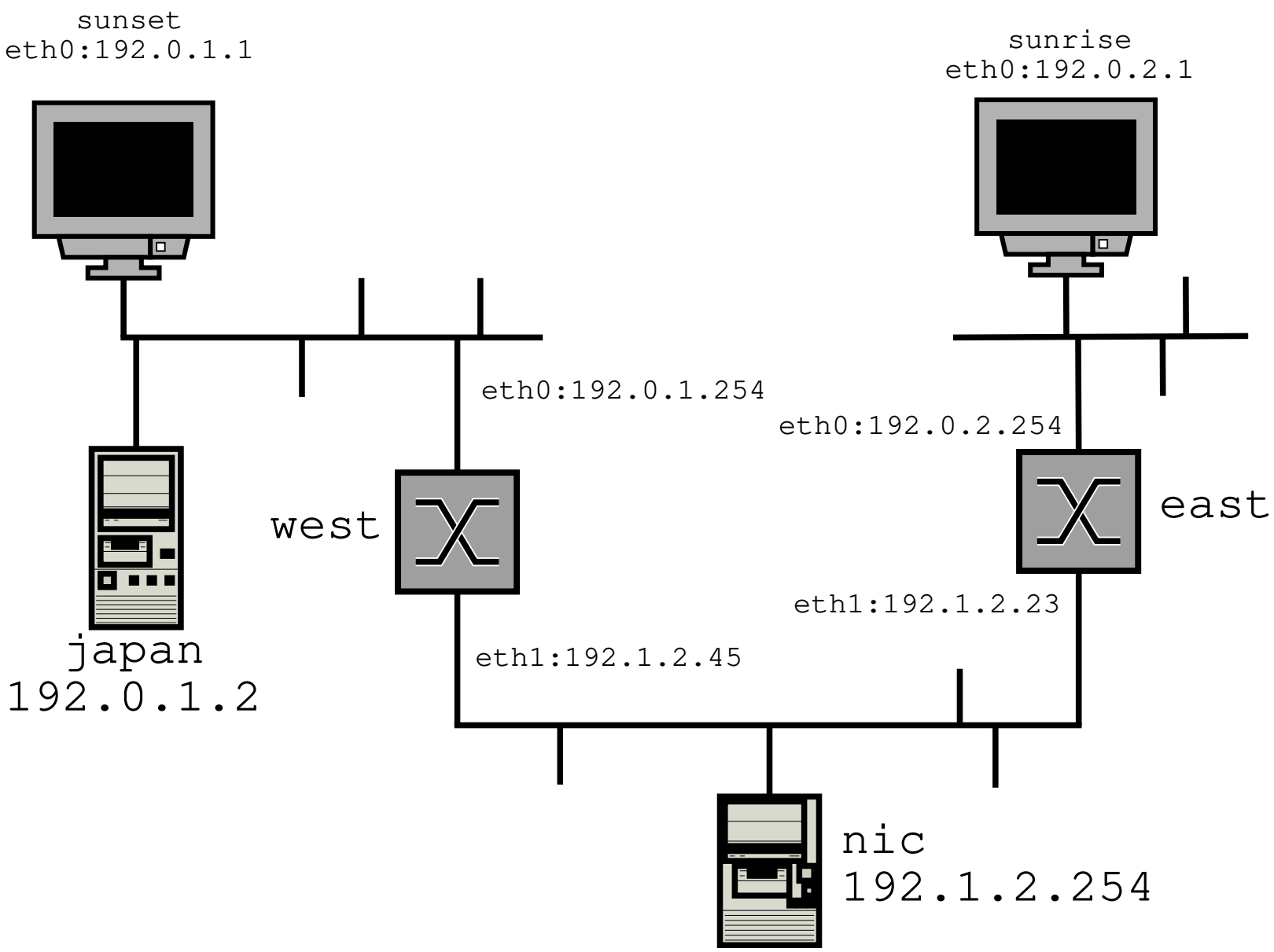
sunset
eth0:192.0.1.1
sunrise
eth0:192.0.2.1
eth0:192.0.1.254
eth0:192.0.2.254
west
east
eth1:192.1.2.23
eth1:192.1.2.45
japan
192.0.1.2
nic
192.1.2.254